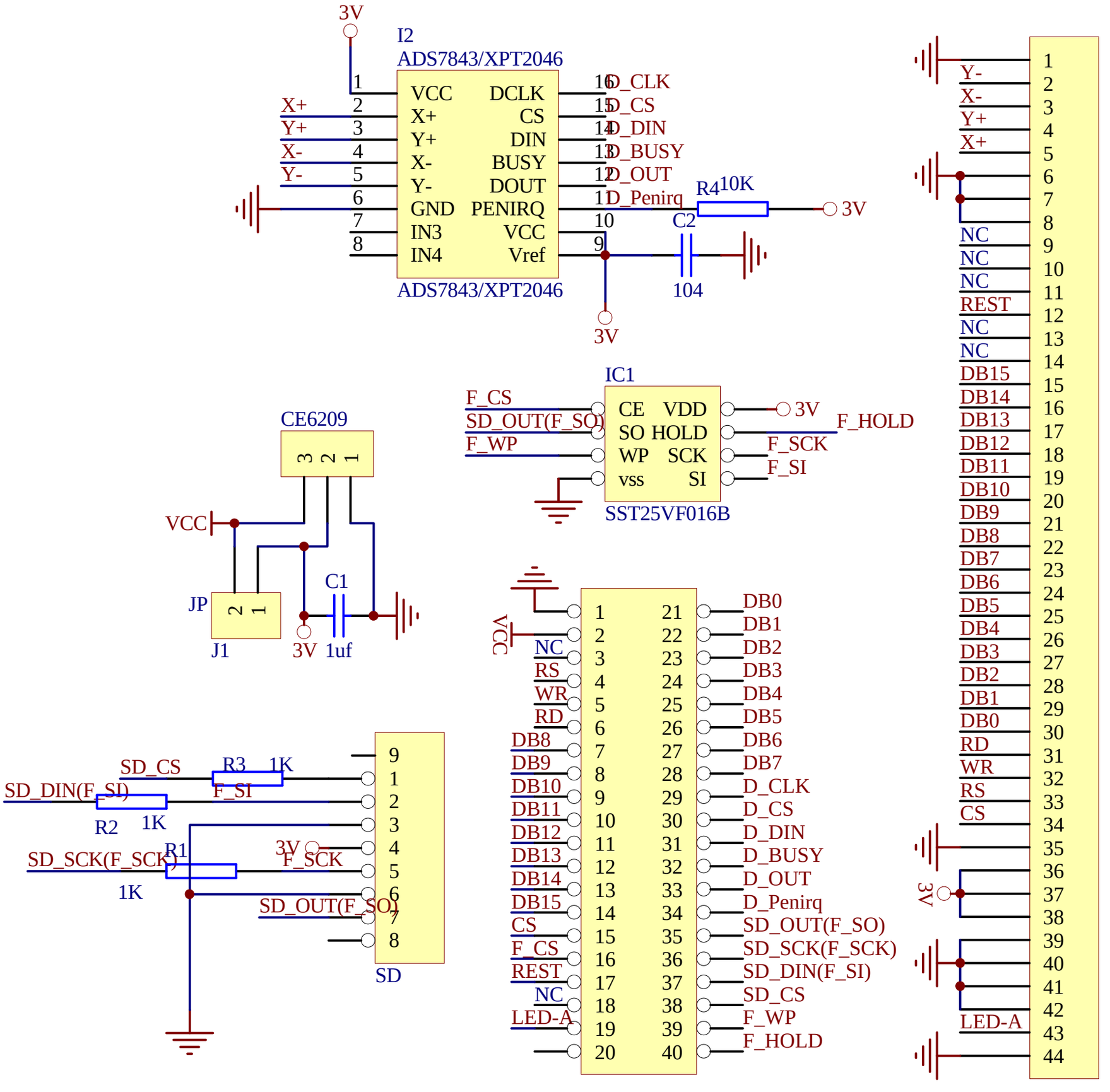
3V
I2
ADS7843/XPT2046
VCC
X+
Y+
X-
Y-
GND
IN3
IN4
DCLK
CS
DIN
BUSY
DOUT
PENIRQ
VCC
Vref
D_CLK
D_CS
D_DIN
D_BUSY
D_OUT
D_Penirq
R4 10K
C2
104
ADS7843/XPT2046
IC1
F_CS
SD_OUT(F_SO)
F_WP
CE
SO
WP
vss
VDD
HOLD
SCK
SI
F_HOLD
F_SCK
F_SI
SST25VF016B
CE6209
VCC
JP
J1
C1
1uf
SD_CS
R3 1K
SD_DIN(F_SI)
F_SI
R2 1K
SD_SCK(F_SCK)
R1
1K
F_SCK
SD_OUT(F_SO)
SD
DB0
DB1
DB2
DB3
DB4
DB5
DB6
DB7
D_CLK
D_CS
D_DIN
D_BUSY
D_OUT
D_Penirq
SD_OUT(F_SO)
SD_SCK(F_SCK)
SD_DIN(F_SI)
SD_CS
F_WP
F_HOLD
NC
RS
WR
RD
REST
LED-A
40pin breakout
TFT-40