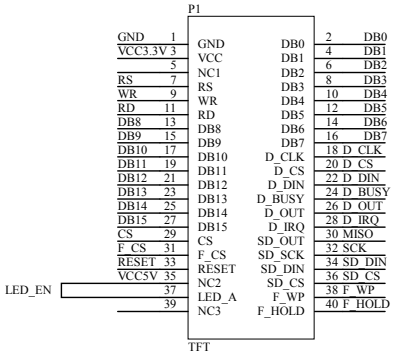

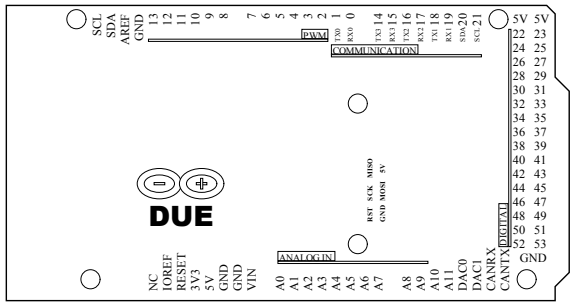

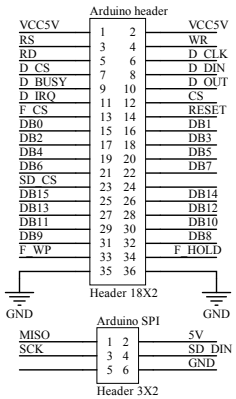

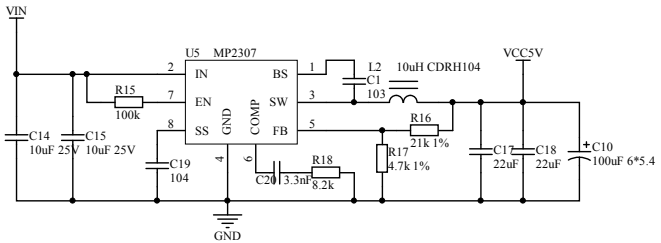

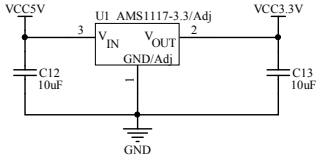

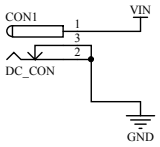

Title		
Size A3	Number	Revision
Date: 2014/4/8	Sheet of	
File: E:\product information\..\7-inch_TFT_Shield_V1.0.SchDoc	Drawn By:	